ADVANCE TABCO
SMART FABRICATION™

STAINLESS STEEL

REGALINE CORNER SINKS NSF

FEATURING A
TILE EDGE DESIGN

Item #: _____ Qty #: _____
Model #: _____
Project #: _____





Includes Adjustable Side Cross-Bracing

All units furnished with 2 integral drainboards

FEATURES:

Tile edge for ease of installation.

Fabricated sink bowls
(94-K5-11D & 94-K3-11D have Deep Drawn Bowls)

All sink bowls have a 3/4" radius.

Featuring the single bowl unit design.

Corner sinks are supplied with adjustable side cross braces featuring leg clamps.

CONSTRUCTION:

All TIG welded.

Welded areas blended to match adjacent surfaces and to a satin finish.

Gussets welded to a die-embossed reinforcing channel.

MATERIAL:

Unit is 16 gauge, type "304" stainless steel.

Legs are 1 5/8" diameter heavy gauge tubular stainless steel with stainless steel gussets.

1" adjustable stainless steel bullet feet.

MECHANICAL:

- Supply is 1/2" IPS hot & cold.
- Faucet holes on 8" centers.
- Faucets are not included **(see accessories)**.
- Waste drains are 1 1/2" IPS S/S basket type, located in center of sink bowl, and are included.

MODEL #	# of Comp.	Wall Dim	Optional Poly Covers	Approx. ship wt.	cu.
94-K2-24D	3	70 5/8" x 70 5/8"	K2-EF	265	62
94-K4-24D	3	78 5/8" x 78 5/8"	K2-FF	338	114
94-K6-18D	3	60 5/8" x 60 5/8"	K-2CF	231	64
94-K8-30D	3	84 5/8" x 84 5/8"	K2-GF & K2-EF	350	114
94-K3-11D	3	55" x 55"	K2-BF & K2-HF	215	114
94-K5-11D	3	42" x 42"	K2-AF & K2-HF	180	114
94-K7-18D	3	66 5/8" x 66 5/8"	K-2FF & K-2DF	260	64
94-K7-24D	3	72 5/8" x 72 5/8"	K-2FF	275	114

ACCESSORIES	Model #	Qty
FAUCETS		

All Units Require 2 Sets of Faucets

ADVANCE TABCO
SMART FABRICATION™
www.advancetabco.com

Customer Service Available To Assist You 1-800-645-3166 8:30 am - 7:00 pm E.S.T.

For Orders & Customer Service:
Email: customer@advancetabco.com or **Fax:** 631-242-6900

For Smart Fabrication™ Quotes:
Email: smartfab@advancetabco.com or **Fax:** 631-586-2933

DIMENSIONS and SPECIFICATIONS

TOL Overall: ± .500”
Interior: ± .250”

ALL DIMENSIONS ARE TYPICAL

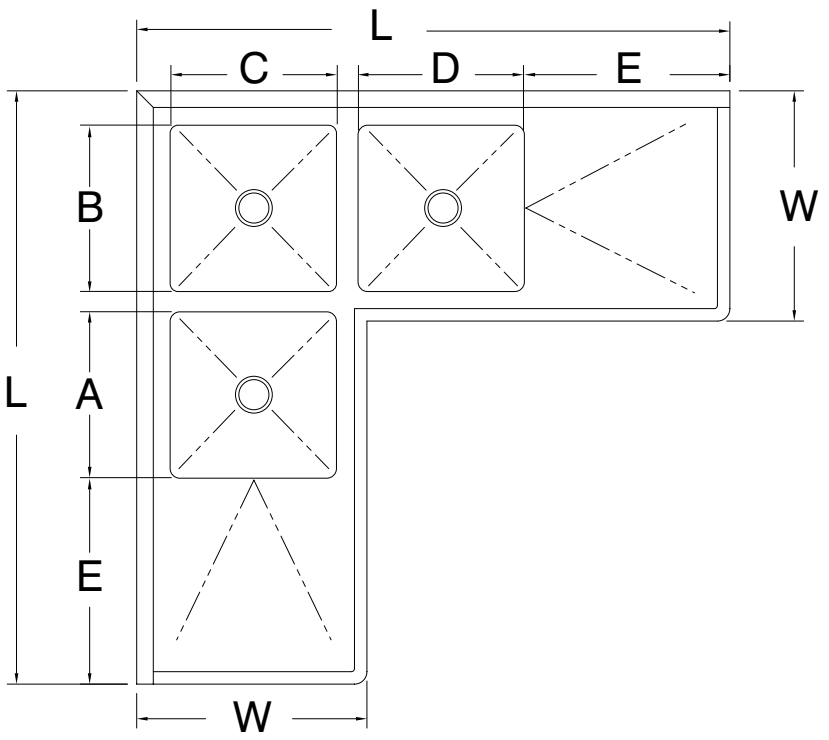

PLUMBING ROUGH-IN

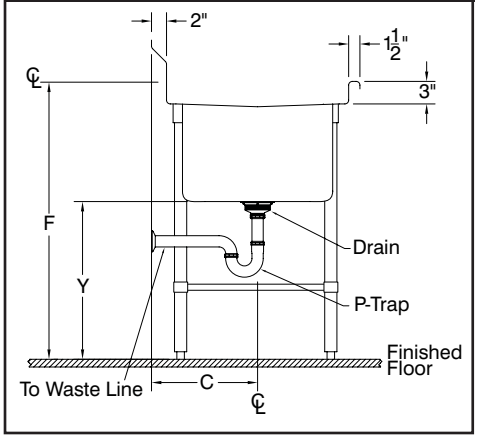

SECTION

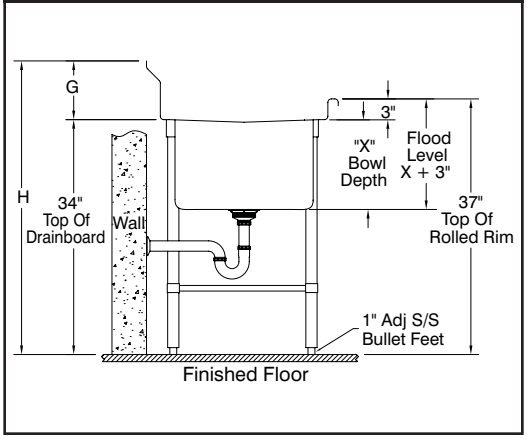

Model #	W	L	A	B	C	D	E	F	G	H	X	Y
94-K2-24D	27 3/4”	70 5/8”	20”	20”	20”	20”	24”	37”	8”	45”	12”	22”
94-K4-24D	31 3/4”	78 5/8”	24”	24”	24”	24”	24”	37”	8”	45”	12”	22”
94-K6-18D	27 3/4”	60 5/8”	16”	20”	20”	16”	18”	37”	8”	45”	12”	22”
94-K8-30D	27 3/4”	84 5/8”	28”	20”	20”	28”	30”	37”	8”	45”	12”	22”
94-K3-11D*	21 3/4”	55”	16”	14”	14”	16”	17”	37”	8”	45”	12”	22”
94-K5-11D*	21 3/4”	42”	10”	14”	14”	10”	10”	37”	8”	45”	10”	24”
94-K7-18D	31 3/4”	66 5/8”	18”	24”	24”	18”	18”	37”	8”	45”	14”	24”
94-K7-24D	31 3/4”	72 5/8”	18”	24”	24”	18”	24”	37”	8”	45”	14”	24”

*94-K5-11D & 94-K3-11D have Deep Drawn Bowls

ADVANCE TABCO is constantly engaged in a program of improving our products. Therefore, we reserve the right to change specifications without prior notice.

© ADVANCE TABCO, NOVEMBER 2026